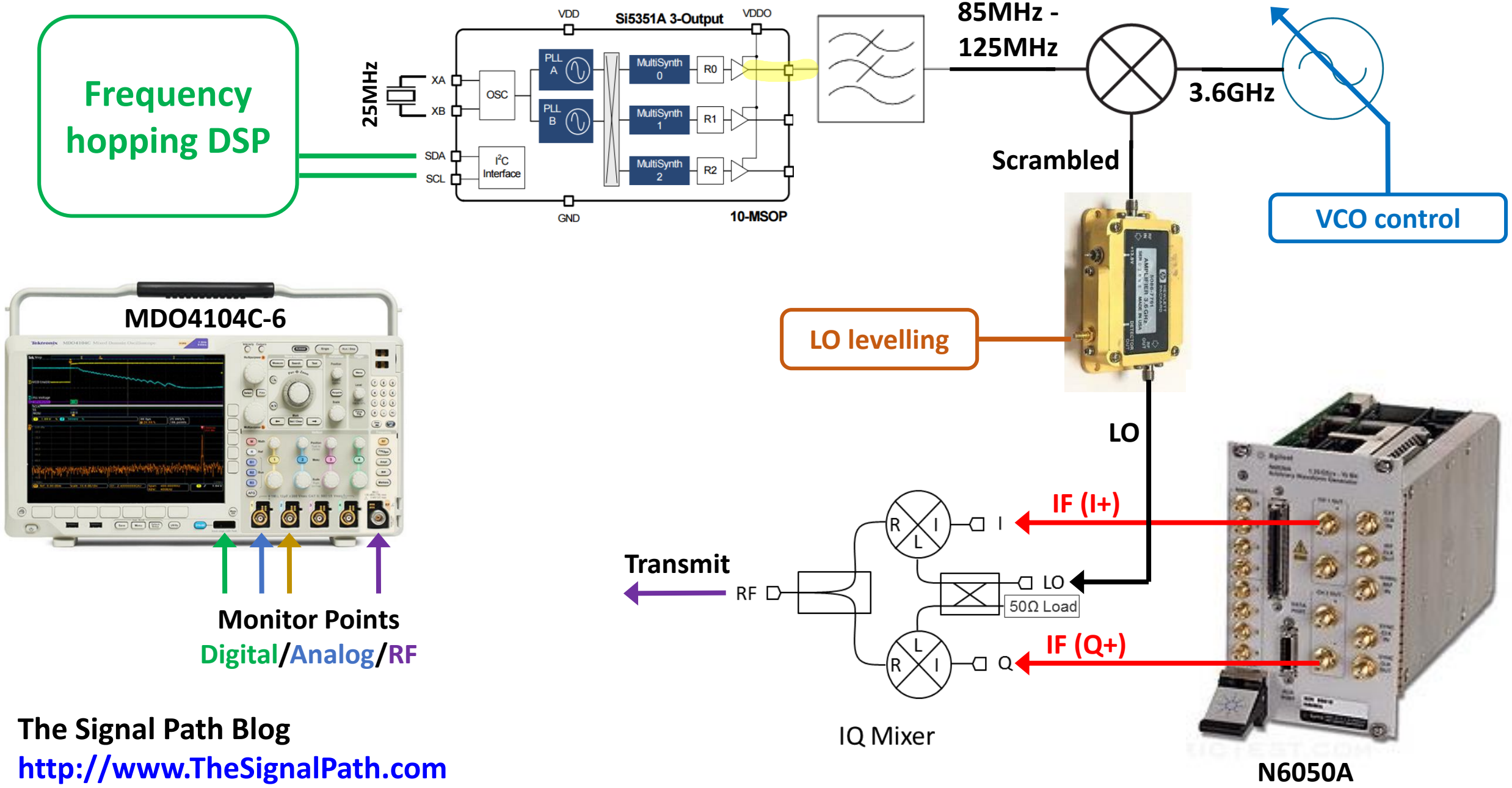

The Signal Path Blog
http://www.TheSignalPath.com

TX Prototype Issues

- Intermittent packet loss and link loss.
- Very high BER floor at all carrier frequencies.
- Does the LO levelling amplifier have sufficient detection bandwidth?
- Frequency hopping timing problems.
- Measure EVM performance after correcting above problems.