Inverter Schematic

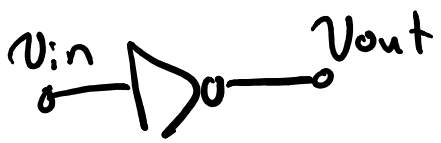

Digital:

Input = "0" → output = "1"

Input = "1" → output = "0"

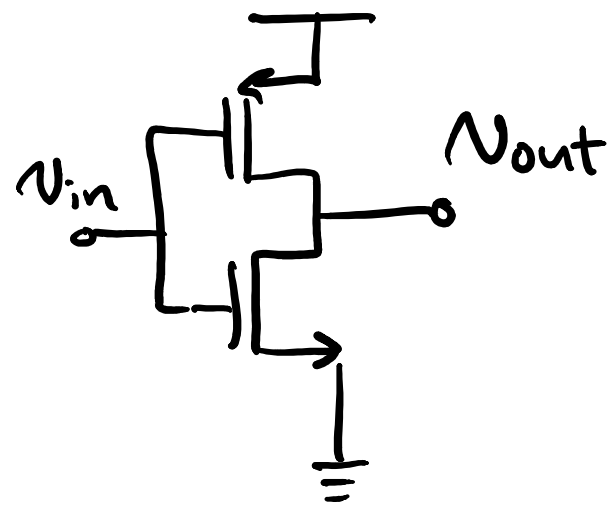

Can be used as amplifier for if biased correctly!

ALD1105 Internal Diagram

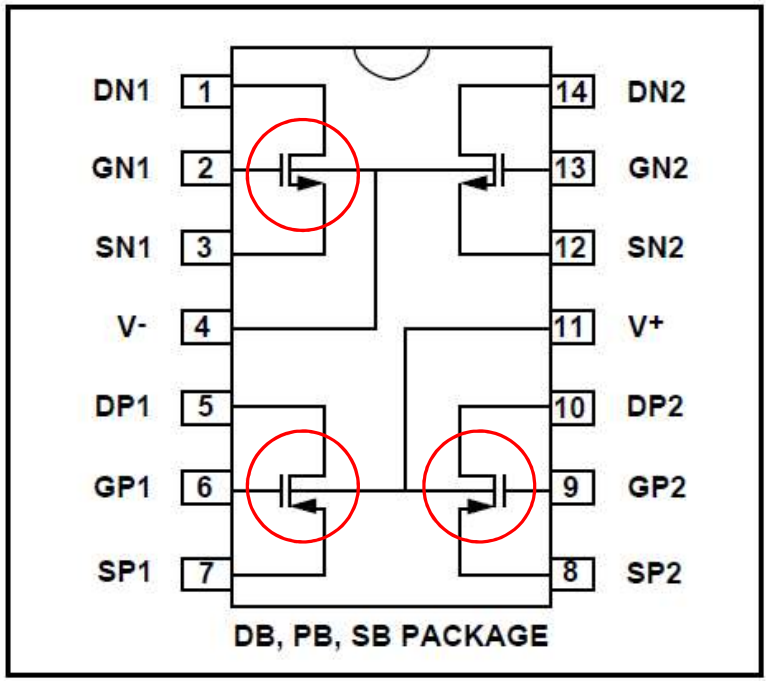

Transfer Characteristics

- Gain in linear region ~ -18.8V/V

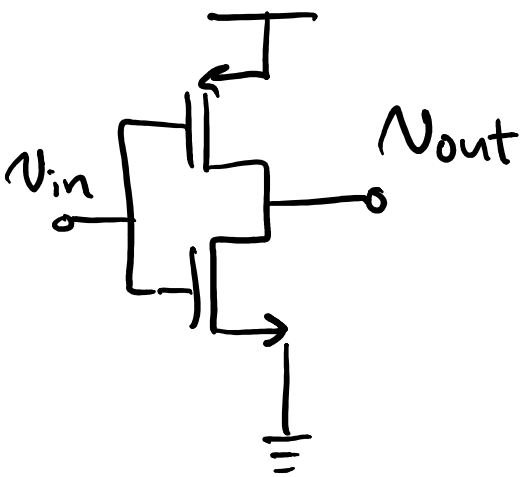

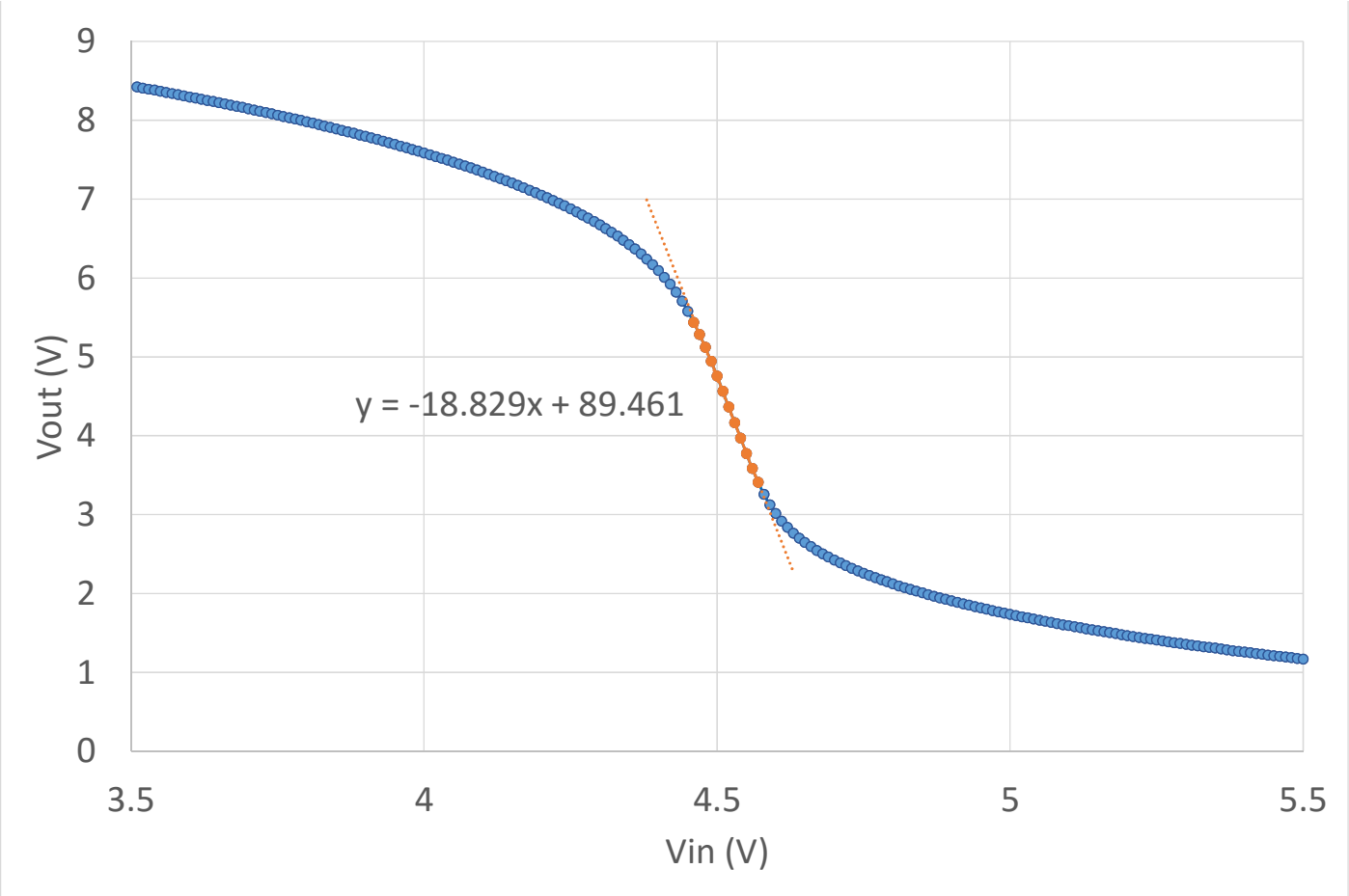

Inverter Gain

- Two common source stages
  - Can find the gain using superposition

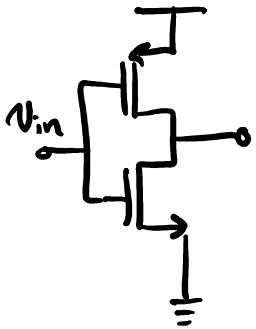

NMOS common-source

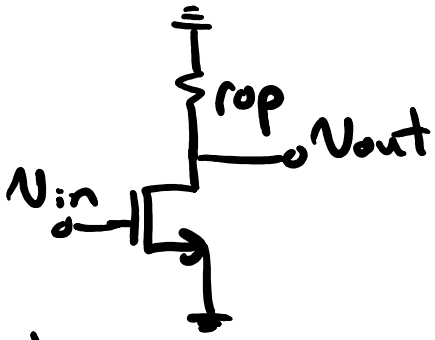

$$\frac{v_{out}}{v_{in}} = -g_{mn}(r_{on} // r_{op})$$

PMOS common-source

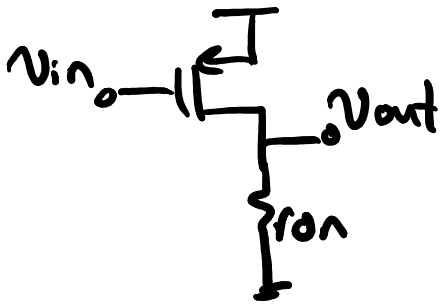

$$\frac{v_{out}}{v_{in}} = -g_{mp}(r_{on} // r_{op})$$

Total gain: $\frac{v_{out}}{v_{in}} = -(g_{mn} + g_{mp})(r_{on} // r_{op})$

Find device parameters using measurements

Transistor Small signal Parameter

$$g_m = \frac{2 I_D}{V_{ov}} = \mu_n C_{ox} \frac{W}{L} V_{ov} = \sqrt{2 \mu_n C_{ox} \frac{W}{L} I_D}$$

$$r_o = \frac{1}{\lambda I_D}$$

Measured IV Curves (IDS vs VDS)

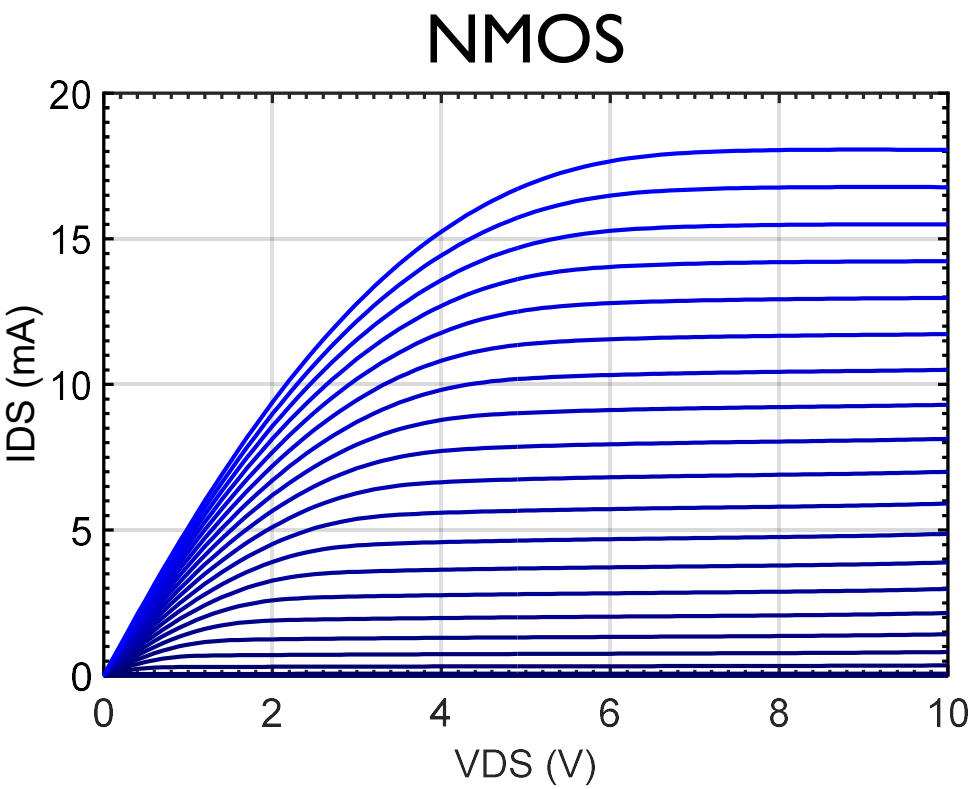

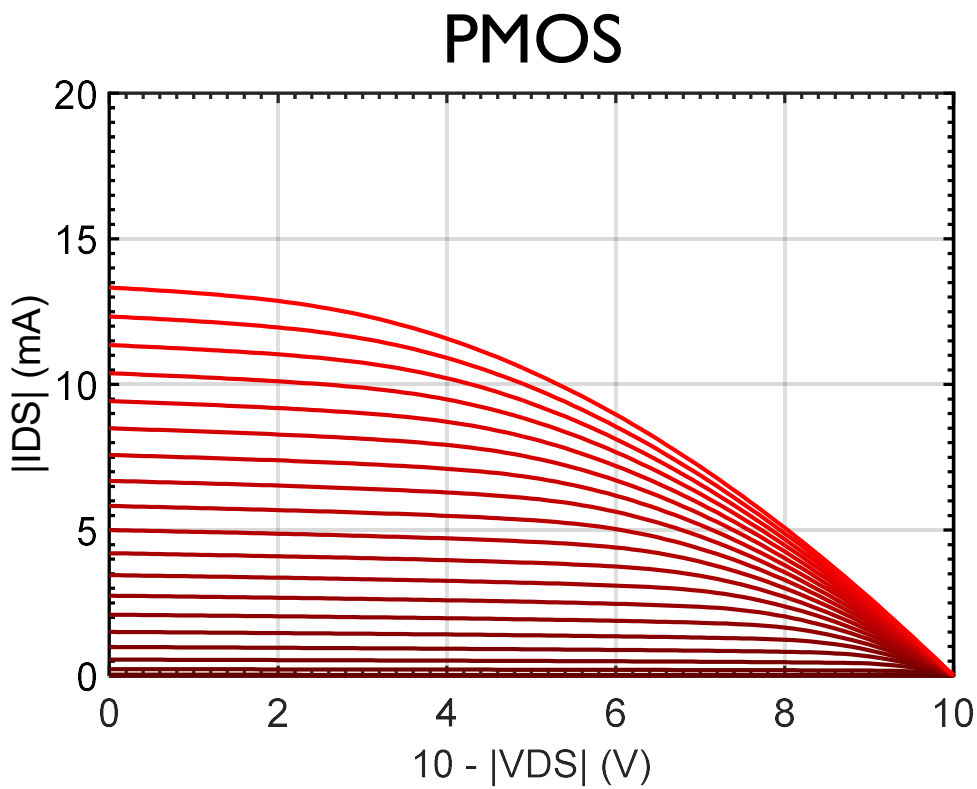

Finding Rout

- For the inverter Vout = 4.5V (As shown earlier)
  - NMOS:VGS = 4.5V, PMOS:VSG = 5.5V

Right in the middle of the linear region

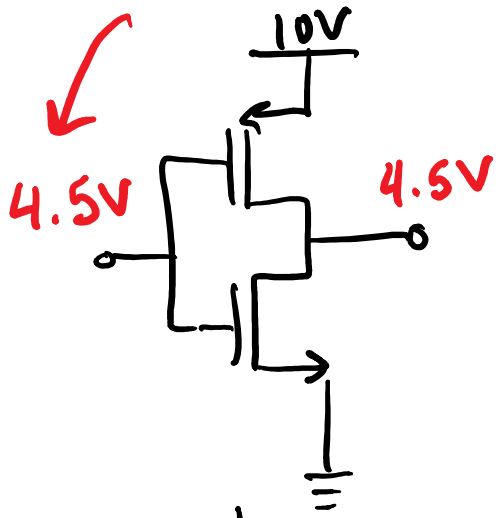

$$r_o = \frac{1}{\lambda I_D}$$

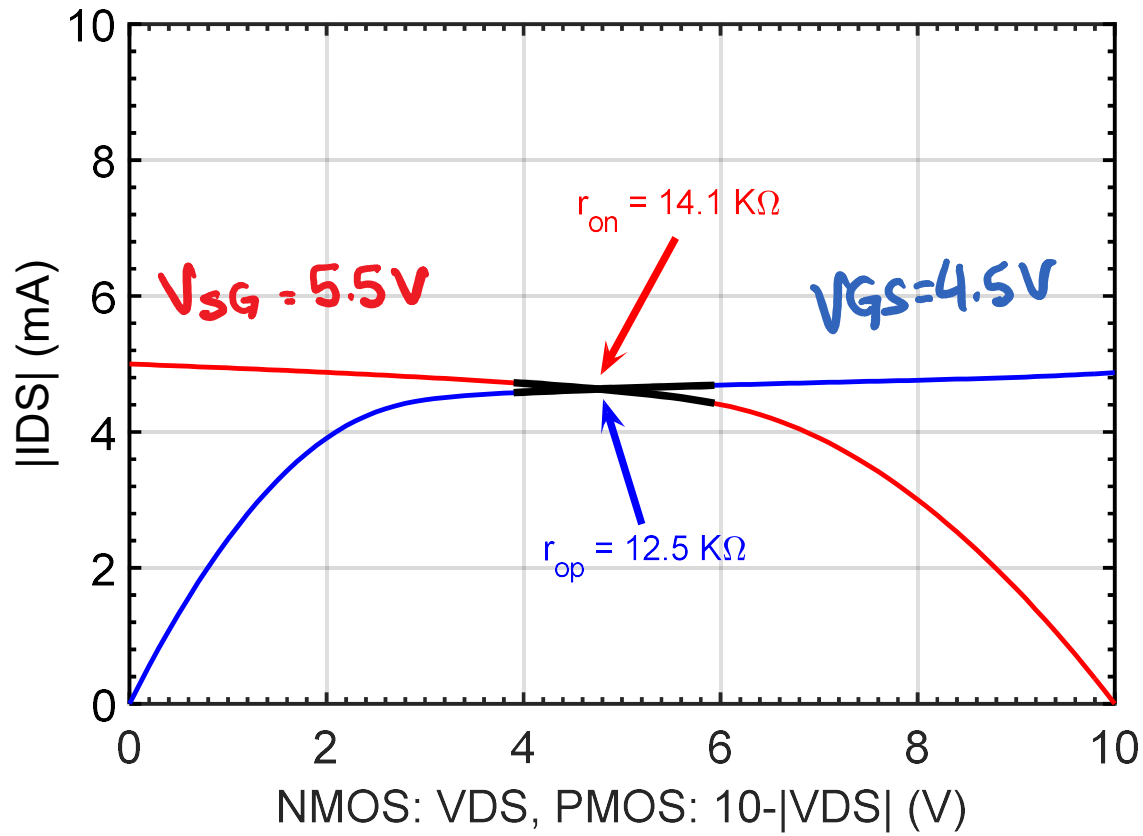

Finding Transconductance (gm)

- Linearize the transistor around the operating point.
- 1/slope will give us transconductance

$$g_m = \frac{2I_D}{V_{OV}} = \mu_n C_{ox}\frac{W}{L}V_{OV} = \sqrt{2\mu_n C_{ox}\frac{W}{L}I_D}$$

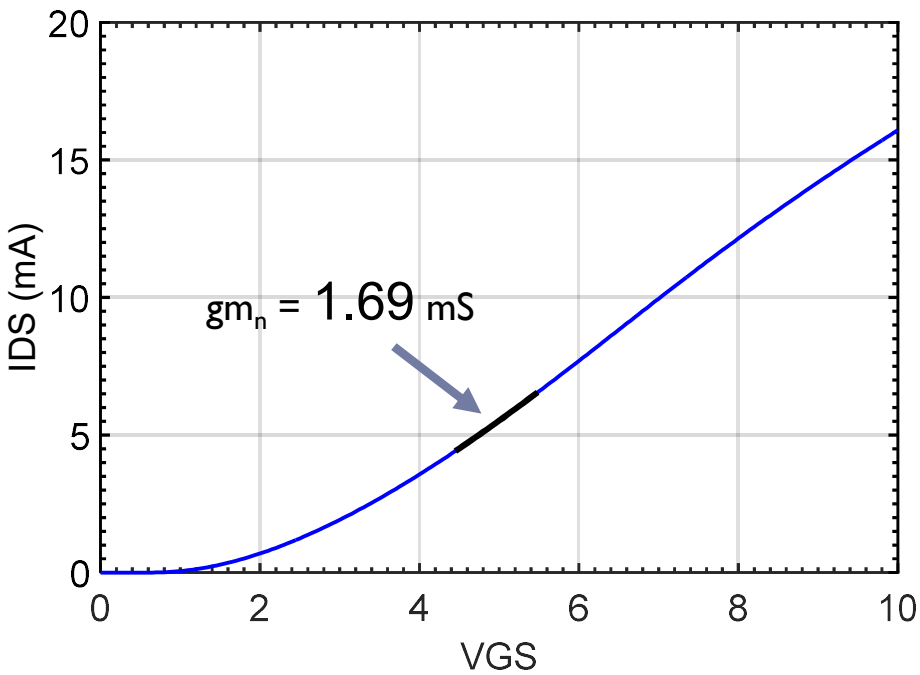

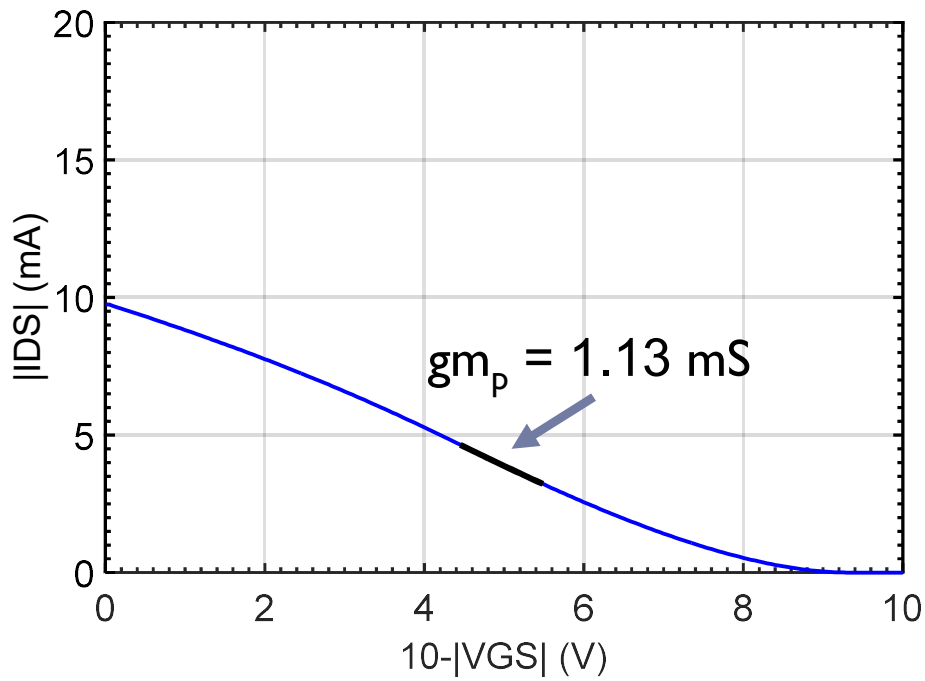

Calculating Gain (From measured device parameters)

- Gain from measured transfer characteristic: $\boxed{-18.8\text{V/V}}$

- Gain using small-signal models and measured device parameters

$$\frac{V_{out}}{V_{in}} = -(g_{m_n} + g_{m_p})(r_{on} // r_{op})$$

$$= -(1.69\text{mS} + 1.12\text{mS})(14.1\text{k}\Omega // 12.5\text{k}\Omega)$$

$$= -(2.81\text{mS})(6.63\text{k}\Omega)$$

$$\boxed{\frac{V_{out}}{V_{in}} = -18.6 \text{ V/V}}$$

Transimpedance Amplifier

- Convert an input current to a voltage

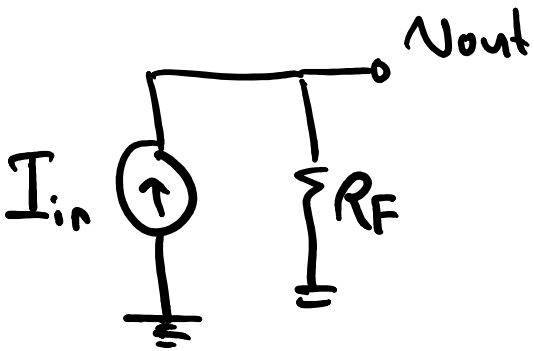

$$\frac{V_{out}}{I_{in}} = R_F$$

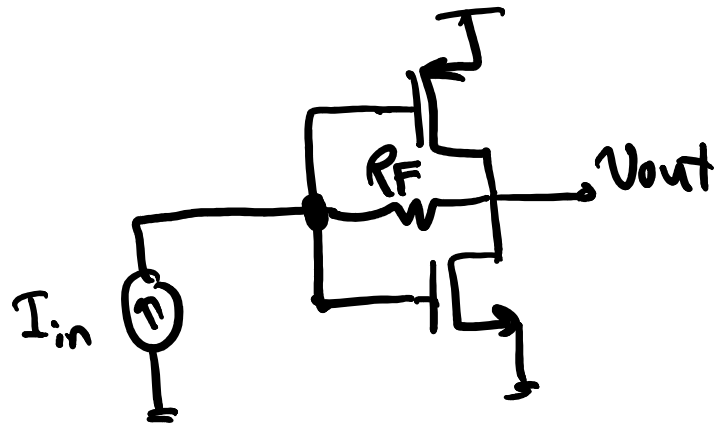

$$\frac{V_{out}}{I_{in}} = ?$$

Now there is feedback, R_F will affect our gain.

Finding TIA Gain

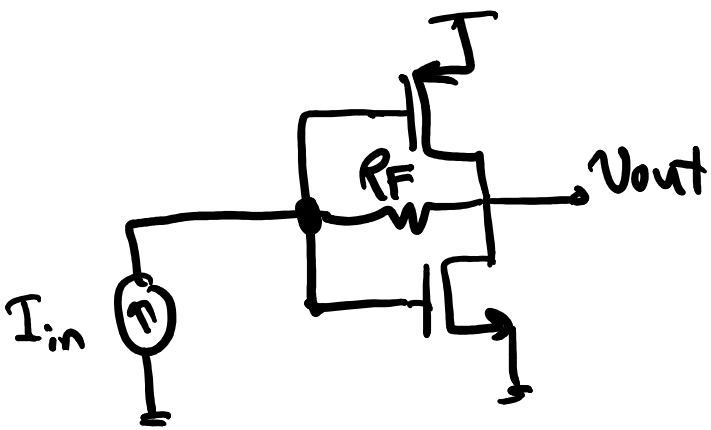

Break the feedback to find gain)
(Consider loading effect of R_F)

$$A_{CL} = \frac{A_{OL}}{1 + BA_{OL}}$$

Shunt-Shunt Feedback:

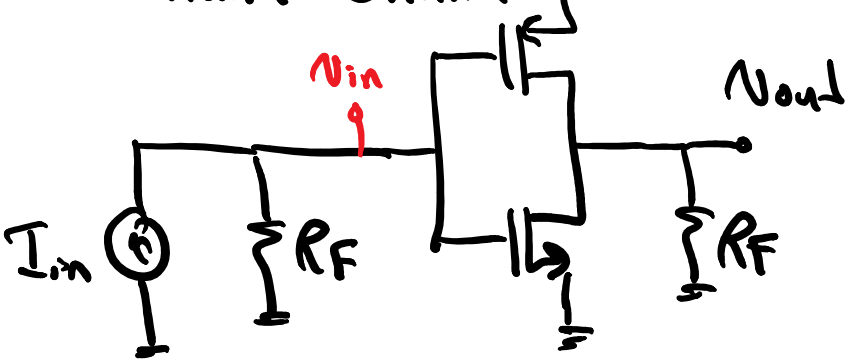

$$\frac{V_{out}}{I_{in}} = \frac{V_{in}}{I_{in}} \times \frac{V_{out}}{V_{in}}$$

$$A_{OL} = R_F \times \underbrace{-(g_{mn} + g_{mp})(r_{on} \,//\, r_{op} \,//\, R_F)}_{15.25\,V/V}$$

Using $R_F = 30k\Omega$

Finding TIA Gain

Finding β:

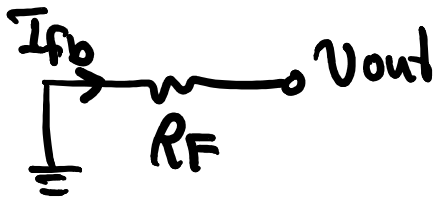

$$\frac{I_{fb}}{V_{out}} = -1/R_F = \beta$$

$$A_{CL} = \frac{A_{OL}}{1+\beta A_{OL}}$$

if A_{OL} is large

$$A_{CL} = 1/\beta = -R_F$$

$A_{CL} = 28.14\ kV/A$ close to $R_F = 30k\Omega$

Gain is slightly less than using a resistor!

Why would we do this?!

Bandwidth Extension

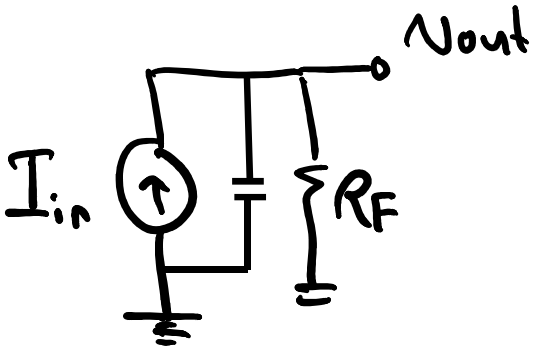

$$\frac{V_{out}}{I_{in}} = R_F$$

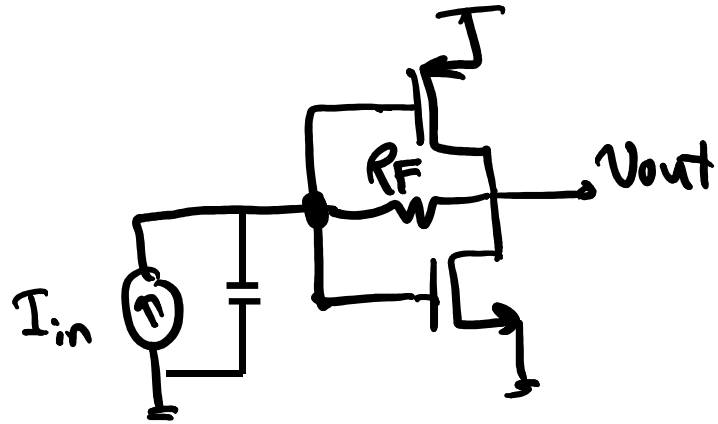

$$\frac{V_{out}}{I_{in}} = ?$$

Now there is feedback, R_F will affect our gain.